Simultaneous Heating&Cooling Output PID Temperature Controllers

TK Series

INSTRUCTION MANUAL

TCD210240AD

Autonics

Thank you for choosing our Autonics product.
Read and understand the instruction manual and manual thoroughly before using the product.
For your safety, read and follow the below safety considerations before using.
For your safety, read and follow the considerations written in the instruction manual, other manuals and Autonics website.
Keep this instruction manual in a place where you can find easily.
The specifications, dimensions, etc are subject to change without notice for product improvement Some models may be discontinued without notice.
Follow Autonics website for the latest information.

Safety Considerations

- Observe all 'Safety Considerations' for safe and proper operation to avoid hazards.
- ⚠ symbol indicates caution due to special circumstances in which hazards may occur.

⚠ Warning Failure to follow instructions may result in serious injury or death

01. Fail-safe device must be installed when using the unit with machinery that may cause serious injury or substantial economic loss.(e.g. nuclear power control, medical equipment, ships, vehicles, railways, aircraft, combustion apparatus, safety equipment, crime/disaster prevention devices, etc.)
Failure to follow this instruction may result in personal injury, economic loss or fire.
02. Do not use the unit in the place where flammable/explosive/corrosive gas, high humidity, direct sunlight, radiant heat, vibration, impact or salinity may be present.
Failure to follow this instruction may result in explosion or fire.
03. Install on a device panel to use.
Failure to follow this instruction may result in electric shock.
04. Do not connect, repair, or inspect the unit while connected to a power source.
Failure to follow this instruction may result in fire or electric shock.
05. Check 'Connections' before wiring.
Failure to follow this instruction may result in fire.
06. Do not disassemble or modify the unit.
Failure to follow this instruction may result in fire or electric shock.

⚠ Caution Failure to follow instructions may result in injury or product damage

01. When connecting the power input and relay output, use AWG 20 (0.50 mm²) cable or over, and tighten the terminal screw with a tightening torque of 0.74 to 0.90 N m.
When connecting the sensor input and communication cable without dedicated cable, use AWG 28 to 16 cable and tighten the terminal screw with a tightening torque of 0.74 to 0.90 N m.
Failure to follow this instruction may result in fire or malfunction due to contact failure.
02. Use the unit within the rated specifications.
Failure to follow this instruction may result in fire or product damage
03. Use a dry cloth to clean the unit, and do not use water or organic solvent.
Failure to follow this instruction may result in fire or electric shock.
04. Keep the product away from metal chip, dust, and wire residue which flow into the unit.
Failure to follow this instruction may result in fire or product damage.

Cautions during Use

- Follow instructions in 'Cautions during Use'. Otherwise, it may cause unexpected accidents.
- Check the polarity of the terminals before wiring the temperature sensor. For RTD temperature sensor, wire it as 3-wire type, using cables in same thickness and length. For thermocouple (TC) temperature sensor, use the designated compensation wire for extending wire.
- Keep away from high voltage lines or power lines to prevent inductive noise. In case installing power line and input signal line closely, use line filter or varistor at power line and shielded wire at input signal line. Do not use near the equipment which generates strong magnetic force or high frequency noise.
- Do not apply excessive power when connecting or disconnecting the connectors of the product.
- Install a power switch or circuit breaker in the easily accessible place for supplying or disconnecting the power.
- Do not use the unit for other purpose (e.g. voltmeter, ammeter), but temperature controller.
- When changing the input sensor, turn off the power first before changing. After changing the input sensor, modify the value of the corresponding parameter.
- 24 VAC~, 24-48 VDC⎓ power supply should be insulated and limited voltage/current or Class 2, SELV power supply device.
- Do not overlapping communication line and power line. Use twisted pair wire for communication line and connect ferrite bead at each end of line to reduce the effect of external noise.
- Make a required space around the unit for radiation of heat. For accurate temperature measurement, warm up the unit over 20 min after turning on the power.
- Make sure that power supply voltage reaches to the rated voltage within 2 sec after supplying power.
- Do not wire to terminals which are not used.
- This unit may be used in the following environments.
  - Indoors (in the environment condition rated in 'Specifications')
  - Altitude Max. 2,000 m
  - Pollution degree 2
  - Installation category II

Ordering Information

This is only for reference, the actual product does not support all combinations.
For selecting the specified model, follow the Autonics website .

T K ❶ ❷ - ❸ ❹ ❺ ❻

❶ Digit
4: 4 digit

❷ Size
N: DIN W 48 × H 24 mm
SP: DIN W 48 × H 48 mm (11 pin plug type)
S: DIN W 48 × H 48 mm
M: DIN W 72 × H 72 mm
W: DIN W 96 × H 48 mm
H: DIN W 48 × H 96 mm
L: DIN W 96 × H 96 mm

❸ Option in/output

Size: N		
PN	**OUT2**	**Function**
1	Normal type[01]	Alarm 1 + CT input
	Heating & Cooling	Alarm 2
2	Normal type	Alarm 1 + Alarm 2
D	Normal type	Alarm 1 + Digital input 1/2
	Heating & Cooling	Digital input 1/2
R	Normal type	Alarm 1+Transmission output
	Heating & Cooling	Transmission output
T	Normal type	Alarm output 1 + RS485 communication
	Heating & Cooling	RS485 communication

Size: SP	
PN	**Function**
1	Alarm 1

Size: S, M, W, H, L	
PN	**Function**
1	Alarm 1
2	Alarm 1 + Alarm output 2
R	Alarm 1 + Transmission output
T	Alarm 1 + RS485 communication
A	Alarm 1 + Alarm 2 + Transmission output
B	Alarm 1 + Alarm 2 + RS485 communication
D	Alarm 1 + Alarm 2 + Digital input 1/2[02]

01) The CT input model of TK4N can be selected only in the normal type model with alarm output 1. (except TK4SP)
02) Only for TK4S-D, OUT2 output terminal is used as DI-2 input terminal.
03) When operating mode is heating or cooling control, OUT2 can be used as alarm output 3 (except TK4N).
04) When operating mode is heating or cooling control, OUT2 can be used as transmission output 2.

❹ Power supply
2: 24 VAC~ 50/60 Hz, 24-48 VDC⎓
4: 100-240 VAC~ 50/60 Hz

❺ OUT1 Control output
R: Relay
S: SSR drive
C: Selectable current or SSR drive output

❻ OUT2 Control output
N: Normal type
[No OUT2 (Heating or Cooling)]
R: Heating & Cooling type
[Relay output][03]
C: Heating & Cooling type
[Selectable current or SSR drive output][04]

Product Components

- Product (+ bracket)
- [TK4N] Terminal protection cover × 1
- Instruction manual

Manual

For proper use of the product, refer to the manuals and be sure to follow the safety considerations in the manuals.
Download the manuals from the Autonics website.

Software

Download the installation file and the manuals from the Autonics website.

■ DAQMaster

DAQMaster is comprehensive device management program. It is available for parameter setting, monitoring.

Sold Separately

- Current transformer (CT)
- 11-pin controller socket: PG-11, PS-11 (N)
- Terminal protection cover: RSA / RMA / RHA / RLA-Cover

Specifications

Series		TK4N	TK4SP	TK4S	TK4M
Power supply	AC type	100 - 240 VAC~ 50/60 Hz			
	AC/DC type	-	24 VAC~ 50/60 Hz, 24-48 VDC⎓		
Permissible voltage range		90 to 110 % of rated voltage			
Power consumption	AC type	≤ 6 VA	≤ 8 VA		
	AC/DC type	-	AC: ≤ 8 VA, DC ≤ 5W		
Unit weight (packaged)		≈ 70 g (≈ 140 g)	≈ 85 g (≈ 130 g)	≈ 105 g (≈ 150 g)	≈ 140 g (≈ 210 g)

Series		TK4W	TK4H	TK4L
Power supply	AC type	100 - 240 VAC~ 50/60 Hz		
	AC/DC type	24 VAC~ 50/60 Hz, 24-48 VDC⎓		
Permissible voltage range		90 to 110 % of rated voltage		
Power consumption	AC type	≤ 8 VA		
	AC/DC type	AC: ≤ 8 VA, DC ≤ 5W		
Unit weight (packaged)		≈ 141 g (≈ 211 g)	≈ 141 g (≈ 211 g)	≈ 198 g (≈ 294 g)

Sampling period		50 ms
Input specification		Refer to 'Input Type and Using Range'
Option input	CT input	• 0.0-50.0 A (primary current measurement range) • CT ratio: 1/1,000 • Measurement accuracy: ±5% F.S. ±1digit
	Digital input	• Contact - ON: ≤ 2 kΩ, OFF: ≥ 90 kΩ • Non contact - residual voltage ≤ 1.0 V, leakage current ≤ 0.1 mA • Outflow current: ≈ 0.5 mA per input
Control output	Relay	250 VAC~ 3 A, 30 VDC⎓ 3 A 1a
	SSR	11 VDC⎓ ±2 V, ≤ 20 mA
	Current	DC 4-20 mA or DC 0-20 mA (parameter), Load resistance: ≤ 500 Ω
Alarm output	Relay	AL1, AL2: 250 VAC~ 3 A 1a • TK4N AL2: 250 VAC~ 0.5 A 1a (≤ 125 VA)
Option output	Transmission	DC 4 - 20 mA (Load resistance: ≤ 500 Ω, Output accuracy: ±0.3% F.S.)
	RS485 comm.	Modbus RTU
Display type		7 segment (red, green, yellow), LED type
Control type	Heating, Cooling	ON/OFF, P, PI, PD, PID Control
	Heating & Cooling	
Hysteresis		• Thermocouple, RTD: 1 to 100 (0.1 to 100.0) °C/°F • Analog: 1 to 100 digit
Proportional band (P)		0.1 to 999.9 °C/°F (0.1 to 999.9%)
Integral time (I)		0 to 9,999 sec
Derivative time (D)		0 to 9,999 sec
Control cycle (T)		• Relay output, SSR drive output: 0.1 to 120.0 sec • Selectable current or SSR drive output: 1.0 to 120.0 sec
Manual reset		0.0 to 100.0%
Relay life cycle	Mechanical	OUT1/2: ≥ 5,000,000 operations AL1/2: ≥ 20,000,000 operations (TK4H/W/L: ≥ 5,000,000 operations)
	Electrical	≥ 100,000 operations
Dielectric strength		Dependent on the power supply
AC voltage type		Between the charging part and the case: 3,000 VAC ~ 50/60 Hz for 1 minute
AC / DC voltage type		Between the charging part and the case: 2,000 VAC ~ 50/60 Hz for 1 minute
Vibration		0.75 mm amplitude at frequency of 5 to 55 Hz in each X, Y, Z direction for 2 hours
Insulation resistance		≥ 100 MΩ (500 VDC⎓ megger)
Noise immunity		±2 kV square shaped noise by noise simulator (pulse width: 1 μs) R-phase, S-phase
Memory retention		≈ 10 years (non-volatile semiconductor memory type)
Ambient temperature		-10 to 50 °C, storage: -20 to 60 °C (no freezing or condensation)
Ambient humidity		35 to 85%RH, storage: 35 to 85%RH (no freezing or condensation)
Protection structure		IP65 (Front panel, IEC standards) • TK4SP: IP50 (Front panel, IEC standards)
Insulation type		Double insulation or reinforced insulation (mark: ⧈, dielectric strength between the measuring input part and the power part: 2 kV)
Certification		Ⓒ Ⓔ ⓤⓚ ⓒⓤⓚ ⓤⓛ ⓤⓢ ⓔⓐⓐ

Communication Interface

■ RS485

Comm. protocol	Modbus RTU
Connection type	RS485
Application standard	EIA RS485 compliance with
Maximum connection	31 units (address: 01 to 99)
Synchronous method	Asynchronous
Comm. Method	Two-wire half duplex
Comm. effective range	≤ 800 m
Comm. speed	2,400 / 4,800 / 9,600 (default) / 19,200 / 38,400 bps (parameter)
Response time	5 to 99 ms (default: 20 ms)
Start bit	1 bit (fixed)
Data bit	8 bit (fixed)
Parity bit	None (default), Odd, Even
Stop bit	1 bit, 2 bit (default)
EEPROM life cycle	≈ 1,000,000 operations (Erase / Write)

Input Type and Using Range

The setting range of some parameters is limited when using the decimal point display.

Input type		Decimal point	Display	Using range (°C)	Using range (°F)
Thermo-couple	K (CA)	1	ᴋCAH	-200 to 1,350	-328 to 2,462
		0.1	ᴋCAL	-199.9 to 999.9	-199.9 to 999.9
	J (IC)	1	JI C.H	-200 to 800	-328 to 1,472
		0.1	JI C.L	-199.9 to 800.0	-199.9 to 999.9
	E (CR)	1	E Cr.H	-200 to 800	-328 to 1,472
		0.1	E Cr.L	-199.9 to 800.0	-199.9 to 999.9
	T (CC)	1	t CC.H	-200 to 400	-328 to 752
		0.1	t CC.L	-199.9 to 400.0	-199.9 to 752.0
	B (PR)	1	b Pr	0 to 1,800	32 to 3,272
	R (PR)	1	r Pr	0 to 1,750	32 to 3,182
	S (PR)	1	S Pr	0 to 1,750	32 to 3,182
	N (NN)	1	n nn	-200 to 1,300	-328 to 2,372
	C (TT)[01]	1	C tt	0 to 2,300	32 to 4,172
	G (TT)[02]	1	G tt	0 to 2,300	32 to 4,172
	L (IC)	1	L I C.H	-200 to 900	-328 to 1,652
		0.1	L I C.L	-199.9 to 900.0	-199.9 to 999.9
	U (CC)	1	U CC.H	-200 to 400	-328 to 752
		0.1	U CC.L	-199.9 to 400.0	-199.9 to 752.0
	Platinel II	1	PLII	0 to 1,390	32 to 2,534
RTD	Cu50 Ω	0.1	CU5	-199.9 to 200.0	-199.9 to 392.0
	Cu100 Ω	0.1	CU10	-199.9 to 200.0	-199.9 to 392.0
	JPt100 Ω	1	JPt.H	-200 to 650	-328 to 1,202
		0.1	JPt.L	-199.9 to 650.0	-199.9 to 999.9
	DPt50 Ω	0.1	dPt5	-199.9 to 600.0	-199.9 to 999.9
	DPt100 Ω	1	dPt.H	-200 to 650	-328 to 1,202
		0.1	dPt.L	-199.9 to 650.0	-199.9 to 999.9
	Nickel120 Ω	1	ni 12	-80 to 200	-112 to 392
Analog	0 to 10 V	-	Au1	0 to 10 V	
	0 to 5 V	-	Au2	0 to 5 V	
	1 to 5 V	-	Au3	1 to 5 V	
	0 to 100 mV	-	Aou1	0 to 100 mV	
	0 to 20 mA	-	AoA1	0 to 20 mA	
	4 to 20 mA	-	AoA2	4 to 20 mA	

01) C (TT): Same as existing W5 (TT) type sensor
02) G (TT): Same as existing W (TT) type sensor
- Permissible line resistance per line: ≤ 5 Ω

■ Display accuracy

Input type	Using temperature	Display accuracy
Thermo-couple RTD	At room temperature (23°C ±5 °C)	(PV ±0.3% or ±1 °C higher one) ±1-digit • Thermocouple K, J, T, N, E below -100 °C and L, U, PLII, RTD Cu50 Ω, DPt50 Ω: (PV ±0.3% or ±2 °C higher one) ±1-digit • Thermocouple C, G and R, S below 200 °C: (PV ±0.3% or ±3 °C higher one) ±1-digit • Thermocouple B below 400 °C: There is no accuracy standards
	Out of room temperature range	(PV ±0.5% or ±2 °C higher one) ±1-digit • RTD Cu50 Ω, DPt50 Ω: (PV ±0.5% or ±3 °C higher one) ±1-digit • Thermocouple R, S, B, C, G: (PV ±0.5% or ±5 °C higher one) ±1-digit • Other sensors: ≤ ±5 °C (≤-100 °C)
Analog	At room temperature (23°C ±5 °C)	±0.3% F.S. ±1-digit
	Out of room temperature range	±0.5% F.S. ±1-digit

- In case of TK4SP Series, ±1 °C will be added to the degree standard.

Unit Descriptions

1. PV display part (Red)
- Run mode: Displays PV (Present value).
- Setting mode: Displays parameter name.

2. SV display part (Green)
- Run mode: Displays SV (Setting value).
- Setting mode: Displays parameter setting value.

3. Input key

Display	Name
[A/M]	Control switching key
[MODE]	Mode key
[◀], [▼], [▲]	Setting value control key

4. Indicator

Display	Name	Description
°C, %, °F	Unit	Displays selected unit (parameter)
AT	Auto tuning	Flashes during auto tuning every 1 sec
OUT1/2	Control output	Turns ON when the control output is ON • SSR output (cycle/phase control) MV over 5% ON • Current output Manual control: 0% OFF, over ON Auto control: below 2% OFF, over 3% ON
AL1/2	Alarm output	Turns ON when the alarm output is ON
MAN	Manual control	Turns ON during manual control
SV1/2/3	Multi SV	The SV indicator is ON which is currently displayed. (When using multi SV function)

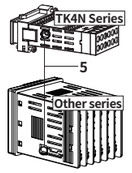

5. PC loader port:
For connecting communication converter (SCM series).

- For the details about old model, refer to the user manual. Download the manuals from the Autonics website.

Dimensions

- Unit: mm, For the detailed drawings, follow the Autonics website.
- Below is based on TK4S Series.

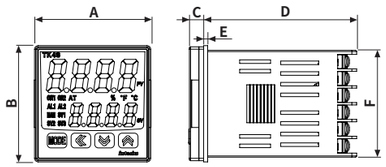

■ Panel cut-out

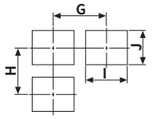

	Body						Panel cut-out			
	A	B	C	D	E	F	G	H	I	J
TK4N	48	24	3	91.8	-	21.8	≥ 55	≥ 37	$45^{+0.6}_{0}$	$22.2^{+0.3}_{0}$
TK4S	48	48	6	64.5	1.7	45	≥ 65	≥ 65	$45^{+0.6}_{0}$	$45^{+0.6}_{0}$
TK4SP	48	48	6	72.2	-	44.8	≥ 65	≥ 65	$45^{+0.6}_{0}$	$45^{+0.6}_{0}$
TK4M	72	72	6	64.5	1.7	67.5	≥ 90	≥ 90	$68^{+0.7}_{0}$	$68^{+0.7}_{0}$
TK4W	96	48	6	64.5	1.5	44.7	≥ 115	≥ 65	$92^{+0.8}_{0}$	$45^{+0.6}_{0}$
TK4H	48	96	6	64.5	1.5	91.5	≥ 65	≥ 115	$45^{+0.6}_{0}$	$92^{+0.8}_{0}$
TK4L	96	96	6	64.5	1.5	91.5	≥ 115	≥ 115	$92^{+0.8}_{0}$	$92^{+0.8}_{0}$

■ Bracket

TK4N

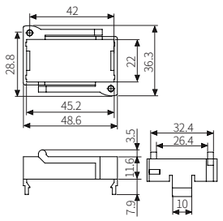

TK4S/SP

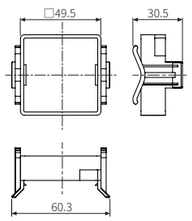

Other series

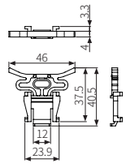

■ Terminal protection cover

TK4N

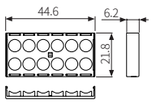

Installation Method

■ TK4N

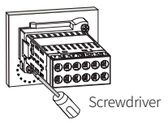

After mounting the product to panel with bracket, fasten the bolts by using screwdriver.

■ Other series

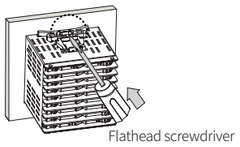

Insert the unit into a panel, fasten the bracket by pushing with a flathead screwdriver.

Errors

Display	Input	Description	Output	Troubleshooting
oPEn	Temperature sensor	Flashes at 0.5 sec interval when input sensor is disconnected or sensor is not connected.	'Sensor error, MV' parameter setting value	Check input sensor status.
	Analog	Flashes at 0.5 sec interval when input is over F.S. ±10%.	'Sensor error, MV' parameter setting value	Check analog input status.
HHHH	Temperature sensor	Flashes at 0.5 sec intervals if the input value is above the input range.	Heating: 0%, Cooling: 100%	When input is within the rated input range, this display disappears.
	Analog	Flashes at 0.5 sec intervals if the input value is over 5 to 10% of high limit or low limit value.	Normal output	
LLLL	Temperature sensor	Flashes at 0.5 sec. intervals if the input value is below the input range.	Heating: 100%, Cooling: 0%	
	Analog	Flashes at 0.5 sec intervals if the input value is over 5 to 10% of low limit or high limit value.	Normal output	
Err	Temperature sensor	Flashes at 0.5 sec intervals if there is error for setting and it returns to the error-before screen.	-	Check setting method.
	Analog			

Connections

- Shaded terminals are standard model.
- Digital input is not electrically insulated from internal circuits, so it should be insulated when connecting other circuits.

■ TK4N

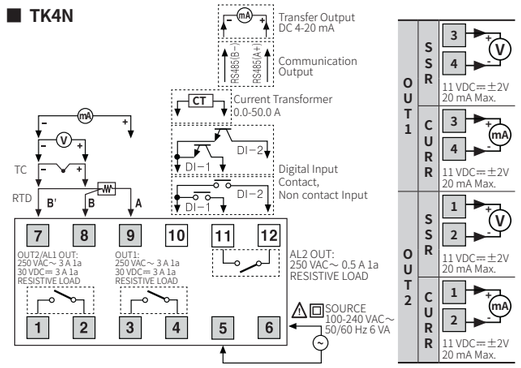

■ TK4S

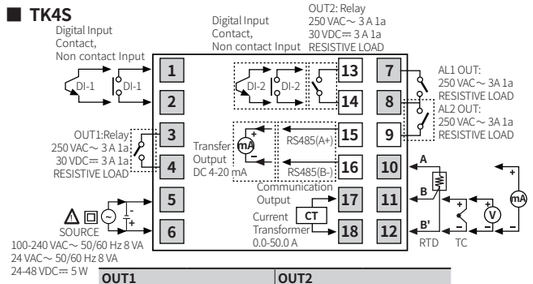

■ TK4SP

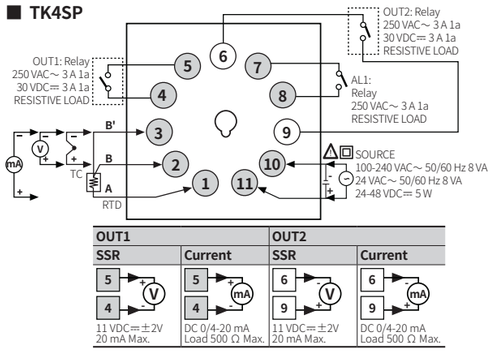

■ TK4M

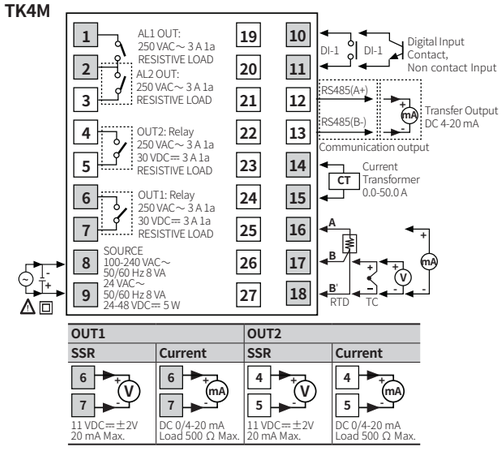

■ TK4H / W / L

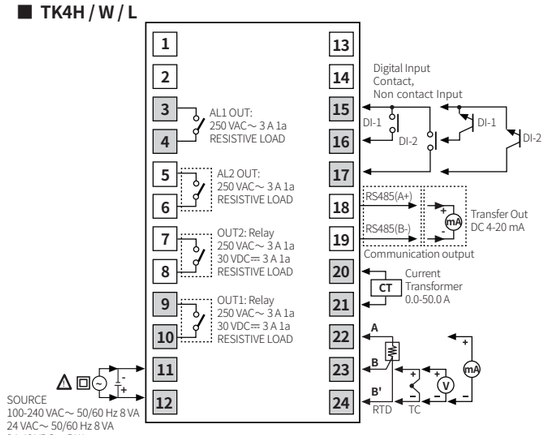

OUT1		OUT2	
SSR	Current	SSR	Current
11 VDC⎓±2V 20 mA Max.	DC 0/4-20 mA Load 500 Ω Max.	11 VDC⎓±2V 20 mA Max.	DC 0/4-20 mA Load 500 Ω Max.

Crimp Terminal Specifications

- Unit: mm, Use the crimp terminal of follow shape.

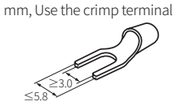

Fork crimp terminal

Round crimp terminal

Initial Display When Power is ON

When power is supplied, after all display will flash for 1 sec, model name is displayed sequentially. After input sensor type will flash twice, enter into RUN mode.

	1. All display	2. Model	3. Input specification	4. Run mode
PV display part	8.8.8.8	tE4	tE4	oPEn
SV display part	8.8.8.8	14rn	PCRH	0

Mode Setting

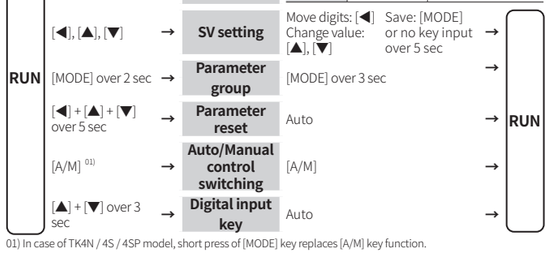

01) In case of TK4N / 4S / 4SP model, short press of [MODE] key replaces [A/M] key function.

Parameter Setting

- Some parameters are activated/deactivated depending on the model or setting of other parameters.
- The 'Parameter mask' feature, which hide unnecessary or inactive parameters, and the 'User parameter group' feature, which quickly and easily set up certain parameters that are frequently used, can be set up in DAQMaster.
- Refer to the user manual for the details.

■ Parameter 1 group

Parameter	Display	Default
Control output RUN/STOP	r-S	rUn
Multi SV selection	Su-n	Su-0
Heater current monitoring	Ct-A	0.0
Alarm output1 low limit	AL1L	1550
Alarm output1 high limit	AL1H	1550
Alarm output2 low limit	AL2L	1550
Alarm output2 high limit	AL2H	1550
Alarm output3 low limit	AL3L	1550
Alarm output3 high limit	AL3H	1550
Multi SV 0	Su-0	0000
Multi SV 1	Su-1	0000
Multi SV 2	Su-2	0000
Multi SV 3	Su-3	0000

■ Parameter 2 group

Parameter	Display	Default
Auto tuning RUN/STOP	Att	oFF
Heating proportional band	H-P	010.0
Cooling proportional band	C-P	010.0
Heating integral time	H-I	0000
Cooling integral time	C-I	0000
Heating derivative time	H-d	0000
Cooling derivative time	C-d	0000
Dead overlap band	db	0000
Manual reset	rESt	050.0
Heating hysteresis	H.HYS	002
Heating OFF offset	H.oSt	000
Cooling hysteresis	C.HYS	002
Cooling OFF offset	C.oSt	000
MV low limit	L-mu	-100.0
MV high limit	H-mu	100.0
RAMP up change rate	rAmU	000
RAMP down change rate	rAmd	000
RAMP time unit	r.Unt	min

■ Parameter 3 group

Parameter	Display	Default
Input specification	In-t	PCRH
Temperature unit	Unit	°C
Analog low limit	L-rG	00.00
Analog high limit	H-rG	10.00
Scaling decimal point	dot	0.0
Low limit scale	L-SC	000.0
High limit scale	H-SC	100.0
Display unit	dUnt	°rio
Input correction	In-b	0000
Input digital filter	inPuF	000.1
SV low limit	L-Su	-200
SV high limit	H-Su	1350
Control output mode	o-Ft	HEAt (Normal type)
		H-C (Heating& Cooling type)
Control type	C-md	PId (Normal type)
		P.P (Heating& Cooling-type)
Auto tuning mode	Att.t	tUn1
OUT1 control output selection	oUt1	CUrr
OUT1 SSR drive output type	o1Sr	Stnd
OUT1 current output range	o1rA	4-20
OUT2 control output selection	oUt2	CUrr
OUT2 current output range	o2rA	4-20
Heating control cycle	H-t	020.0 (Relay)
Cooling control cycle	C-t	002.0 (SSR)

■ Parameter 4 group

Parameter	Display	Default
Alarm output1 Operation mode	AL-1	duCC
Alarm output1 Option	AL1t	AL-A
Alarm output1 Hysteresis	A1HY	001
Alarm output1 contact type	A1n	no
Alarm output1 ON delay time	A1on	0000
Alarm output1 OFF delay time	A1oF	0000
Alarm output2 Operation mode	AL-2	JJdu
Alarm output2 Option	AL2t	AL-A
Alarm output2 Hysteresis	A2HY	001
Alarm output2 contact type	A2n	no
Alarm output2 ON delay time	A2on	0000
Alarm output2 OFF delay time	A2oF	0000
Alarm output3 Operation mode	AL-3	oFF
Alarm output3 Option	AL3t	AL-A
Alarm output3 Hysteresis	A3HY	001
Alarm output3 contact type	A3n	no
Alarm output3 ON delay time	A3on	0000
Alarm output3 OFF delay time	A3oF	0000
LBA time	LbAt	0000
LBA band	LbAb	002 (003)
Analog Transmission output1 Mode	Aom1	Pu
Transmission output1 low limit	FSL1	-200
Transmission output1 high limit	FSH1	1350
Analog Transmission output2 Mode	Aom2	Pu
Transmission output2 low limit	FSL2	-200
Transmission output2 high limit	FSH2	1350
Communication address	Adrs	01
Communication speed	bPS	96
Comm. parity bit	PrtY	nonE
Comm. stop bit	StP	2
Response time	rSYt	20
Comm. write	Com Y	EnA

■ Parameter 5 group

Parameter	Display	Default
Multi SV number	nt.Su	1
Digital input key	di-K	StoP
Digital input1 Terminal Function	di-1	oFF
Digital input2 Terminal Function	di-2	oFF
Manual control, initial MV	ItmU	AUto
Manual control, preset MV	PrmU	000.0
Sensor error MV	ErmU	000.0
Control stop MV	StmU	000.0
Control stop alarm output	St.AL	Cont
User level	USEr	Stnd
SV setting lock	LC.Su	oFF
Parameter 1 group lock	LC.P1	oFF
Parameter 2 group lock	LC.P2	oFF
Parameter 3 group lock	LC.P3	oFF
Parameter 4 group lock	LC.P4	oFF
Parameter 5 group lock	LC.P5	oFF
Password setting	PWd	0000

18, Bansong-ro 513Beon-gil, Haeundae-gu, Busan, Republic of Korea, 48002
www.autonics.com | +82-2-2048-1577 | sales@autonics.com

Autonics